04655

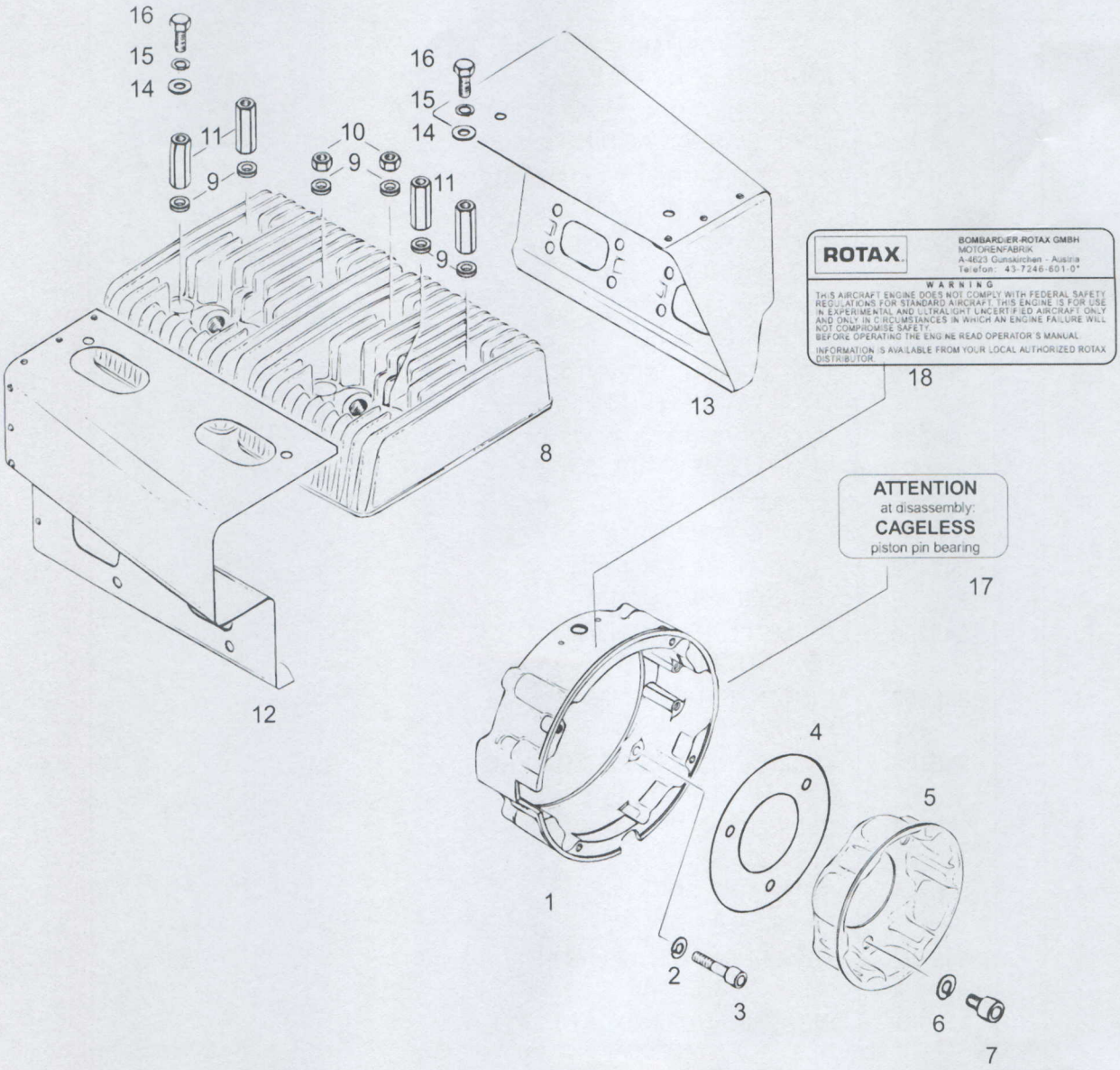

d01241